Produits Neptune

PÉNÉLOPE

Bathtub

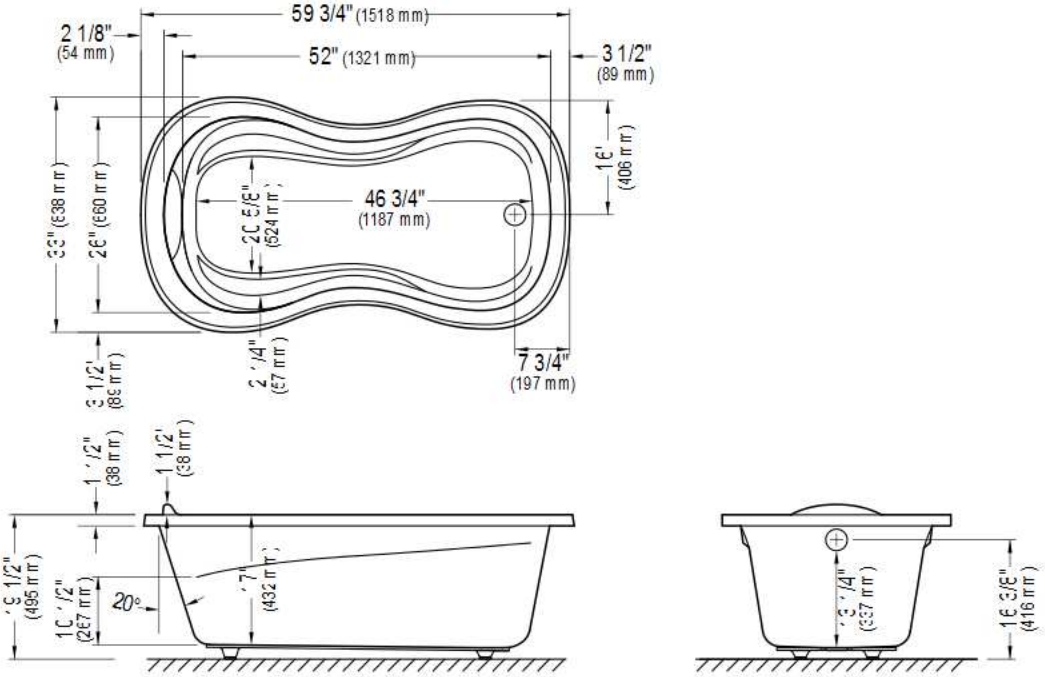

*A bathtub fitted with back jets can cause the pump to protrude by approximately 3" from the overall dimension.

**All dimensions are approximate and subject to change without notice. Please refer to the installation guide before beginning the installation

6835 PICARD STREET
SAINT-HYACINTHE, QUEBEC J2S 1H3
CANADA

PHONE 450 773 7058
FAX 450 773 5063
TOLL-FREE CANADA 1 888 226 7099
TOLL-FREE USA 1 888 226 7899

produitsneptune.com

06-2011